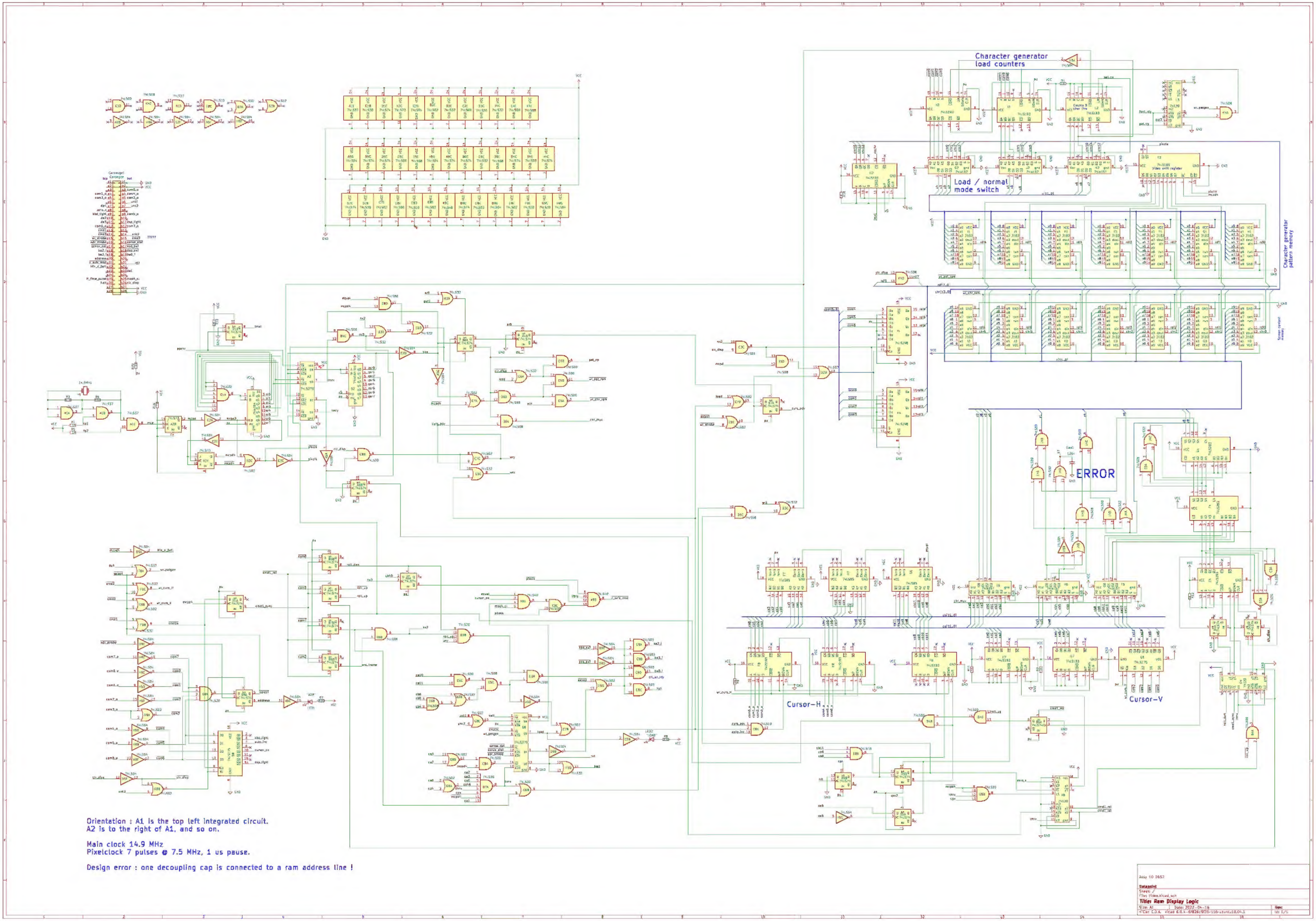

Orientation : A1 is the top left integrated circuit.
A2 is to the right of A1, and so on.

Main clock 14.9 MHz
Pixelclock 7 pulses @ 7.5 MHz, 1 us pause.

Design error : one decoupling cap is connected to a ram address line !

Assy 10 0652

Datapoint
Sheet: /
File: Video.kicad_wch

Title: Ram Display Logic

Size: A1	Date: 2022-04-16	Rev:
KiCad E.D.A. kicad 6.0.4-6f826c9f35-116-ubuntu18.04.1		Id: 1/1